SECTION NO.
910–023

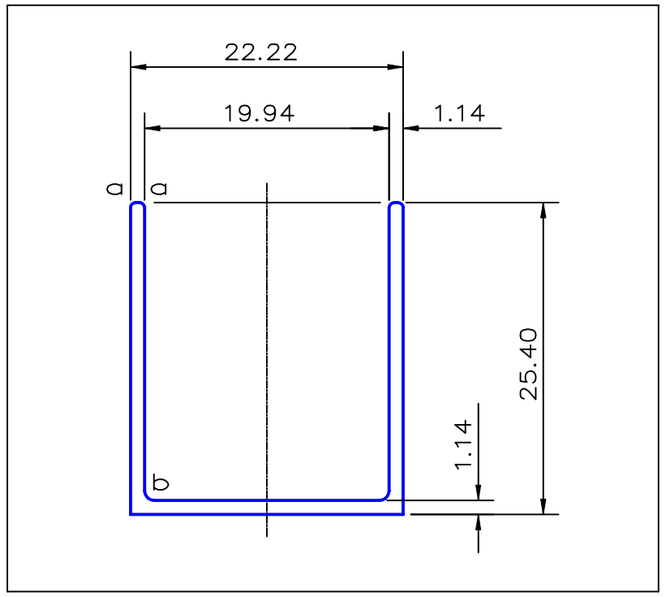

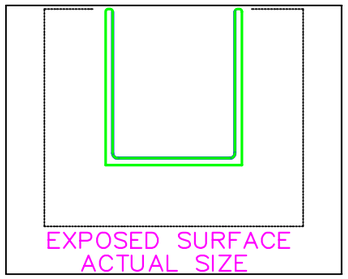

SECTION DATA:
I_{XX} = 5 499 mm^4
I_{YY} = 7 203 mm^4
Theta= 1.0 °
$RadG_x$ = 8. mm
$RadG_y$ = 9. mm
XC_{Right} = 11.11 mm
XC_{Left} = 11.11 mm
YC_{top} = 16.17 mm
YC_{bot} = 9.23 mm
$Z_{xx}top$ = 340 mm^3
$Z_{xx}bot$ = 596 mm^3
$Z_{yy}right$ = 648 mm^3
$Z_{yy}left$ = 648 mm^3

a = 0.40 radius
b = 0.79 radius

0.40 RADIUS ON ALL OUTSIDE CORNERS
UNLESS OTHERWISE SPECIFIED

EXTRUDED FINISH : ARCHITECTURAL

NO	DATE	DR	REVISION

AREA	80.8	SQ MM
WEIGHT	0.219	KG M
PERIMETER	142.4	MM
ANOD PERIM	142.4	MM
PAINT PERIM	100.0	MM
C CIRCLE DIA	34.	MM
FACTOR	651.	
ALLOY	6063	
TEMPER	T6	

G. James Extrusion Co.
A.C.N 010 828 234
1082 KINGSFORD SMITH DRIVE, EAGLE FARM, QUEENSLAND, 4009
PO BOX 1376, EAGLE FARM BC, 4009
PHONE : (07) 3877 2833 FAX : (07) 3877 2890

CUSTOMER
G. JAMES EXTRUSION Co.

CUSTOMER PART NAME NO.
22.22 X 25.4 X 1.4 CHANNEL

SCALE
2:1

TOLERANCES IN ACCORDANCE WITH AS 1866–1986
APPLY UNLESS OTHERWISE SPECIFIED

DRAWN	CHECK	DATE	DWG. NO.
A.T		18/11/88	910–023