SECTION NO.
950-029

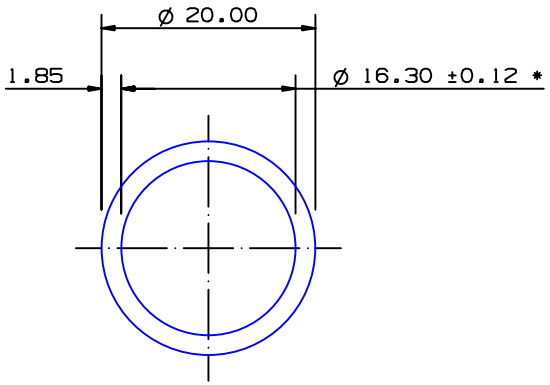

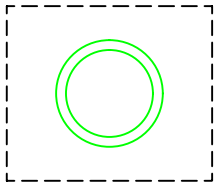

EXPOSED SURFACE
ACTUAL SIZE

* FLATNESS	0.30mm / 100mm	
* ANGULARITY	1°	
STRAIGHTNESS	0.60mm / 300mm	
TWIST	1.00° / 300mm	7° max

* = 1/2 STANDARD TOLERANCE

SECTION DATA:
I_{xx} = 4 389 mm^4
I_{yy} = 4 389 mm^4
Theta= 1.0 °
$RadG_x$ = 6 mm
$RadG_y$ = 6 mm
XC_{Right} = 10.0 mm
XC_{Left} = 10.0 mm
YC_{top} = 10.0 mm
YC_{bot} = 10.0 mm
Z_{xx}top = 439 mm^3
Z_{xx}bot = 439 mm^3
Z_{yy}right = 439 mm^3
Z_{yy}left = 439 mm^3

0.40 RADIUS ON ALL OUTSIDE CORNERS
UNLESS OTHERWISE SPECIFIED

EXTRUDED FINISH : ARCHITECTURAL

NO	DATE	DR	REVISION
			A
2	25/05/11	SPG	SECTION NUMBER MODIFIED C/N 8850
1	23/04/93	JSO	6106 T6 WERE 606035 T5, WALK-A-SEAT ADDED

AREA	105.5	SQ MM
WEIGHT	0.286	KG M
PERIMETER	114.0	MM
ANOD PERIM	62.8	MM
PAINT PERIM	100.0 (0.0)	MM
C CIRCLE DIA	20	MM
FACTOR	399	
ALLOY	6106	
TEMPER	T6	

G. James Extrusion Co.
A.C.N 010 828 234
1082 KINGSFORD SMITH DRIVE, EAGLE FARM, QUEENSLAND, 4009
PO BOX 1376, EAGLE FARM BC, 4009
PHONE : (07) 3877 2833 FAX : (07) 3877 2890

© COPYRIGHT 2004
THIS DRAWING IS THE PROPERTY OF
G.JAMES EXTRUSION CO. PTY LTD
ALL RIGHTS RESERVED

CUSTOMER: G. JAMES EXTRUSION Co.

CUSTOMER PART NAME / NO.: DIA 20.0 x 1.85 ROUND TUBE

SCALE: 2:1

TOLERANCES IN ACCORDANCE WITH AS/NZS 1866:1997 APPLY UNLESS OTHERWISE SPECIFIED

DRAWN	CHECK	DATE	DWG. NO.
JSO		16/04/93	950-029