SECTION NO.
950-015

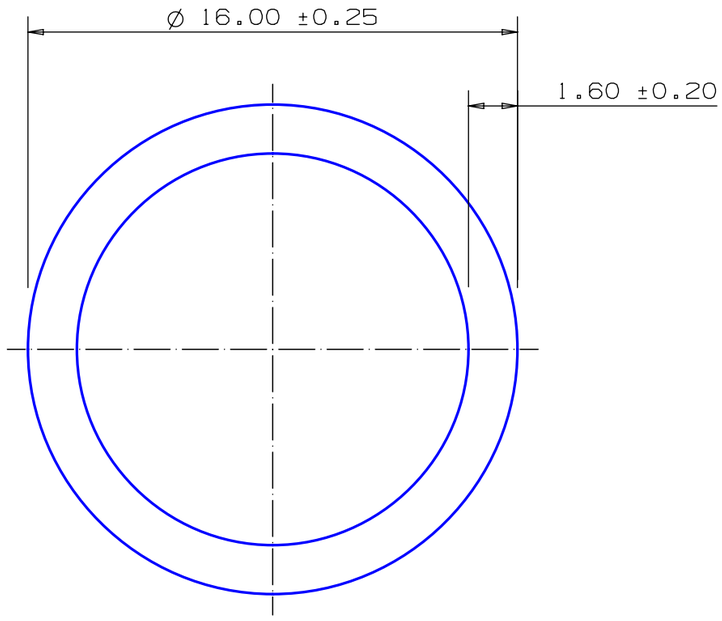

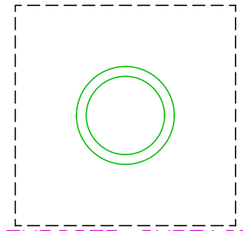

EXPOSED SURFACE
ACTUAL SIZE

* FLATNESS	0.30mm / 100mm
* ANGULARITY	1°
STRAIGHTNESS	0.60mm / 300mm
TWIST	1.00° / 300mm 7° max

* = 1/2 STANDARD TOLERANCE

MOMENTS OF INERTIA:
I_{xx} = 1 899 mm^4
I_{yy} = 1 899 mm^4
$RadG_x$ = 5 mm
$RadG_y$ = 5 mm
XC_{Right} = 8.00 mm
XC_{Left} = 8.00 mm
YC_{top} = 8.00 mm
YC_{bot} = 8.00 mm
$Z_{xx}top$ = 237 mm^3
$Z_{xx}bot$ = 237 mm^3
$Z_{yy}right$ = 237 mm^3
$Z_{yy}left$ = 237 mm^3

0.40 RADIUS ON ALL OUTSIDE CORNERS
UNLESS OTHERWISE SPECIFIED

EXTRUDED FINISH : ARCHITECTURAL

CUSTOMER DRAWING APPROVAL
This drawing has been checked for ALL design requirements and approved.
G.James Extrusion Co. Pty Ltd shall not be responsible for product design, product use or any infringement of copyright, registered design or patent.

Customer.....

Eng. Design Checked by.....Date.....

Final Approved.....Date.....

NO	DATE	DR	REVISION
			B
1	10/03/92	BPW	TOLERANCES 0.25 0.20 WERE 0.41 0.15 C/N 996

AREA	72.4	SQ MM
WEIGHT	0.196	KG M
PERIMETER	90.5	MM
ANOD PERIM	50.3	MM
PAINT PERIM	100.0	MM
POLISH PERIM	0.0	MM
C CIRCLE DIA	16	MM
FACTOR	461	
ALLOY	6063	
TEMPER	T6	

©Copyright
This drawing is the property of G.James Extrusion Co Pty Ltd. It must not be copied or shown to third parties without written consent

G.James glass & aluminium | When Experience Matters

G.James Extrusion Co Pty Ltd
P (07) 3877 2833 F (07) 3877 2890
ABN 95 010 828 234
www.gjames.com

Quality ISO 9001

CUSTOMER
G. JAMES EXTRUSION Co.

CUSTOMER PART NAME NO.
16 x 1.6 ROUND TUBE

SCALE
5:1

TOLERANCES IN ACCORDANCE WITH AS/NZS 1866:1997
APPLY UNLESS OTHERWISE SPECIFIED

DRAWN	CHECK	DATE	DWG. NO.
JWC		06/04/87	950-015