BOAT CROSS BOLLARDS

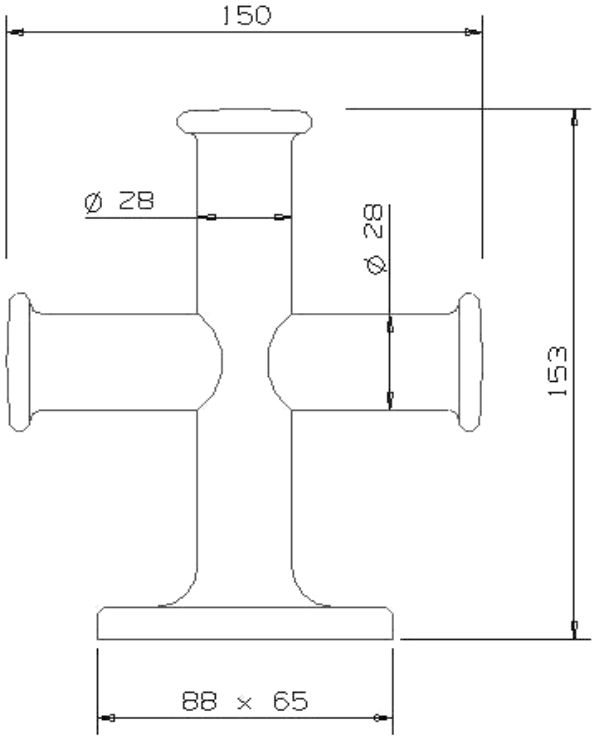

150 MM (6”) CROSS BOLLARD

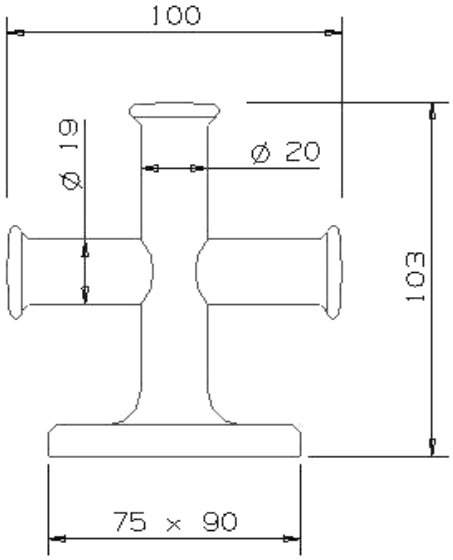

100MM (4”) CROSS BOLLARD

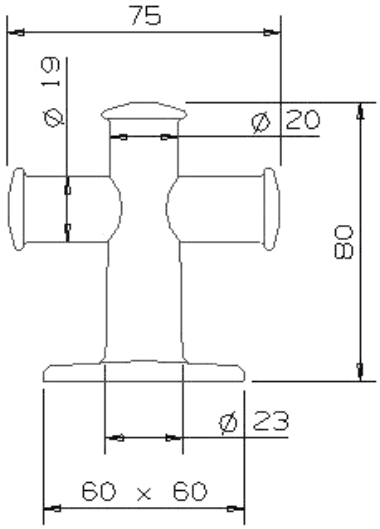

75 MM (3”) CROSS BOLLARD

© Copyright 2004. G James Australia Pty Ltd. All Rights Reserved.